□□

□□□□	□□□□□□□□□□□□□
□□	□□/□□□
□□	1700*3600*2600□□
□□	10□□□□□□□
□□	□□□□□□□□/□□□
□□	□□
□□□	10□
OEM/ODM	□□

□□

□□□□□□□□□□□□□□□□□□□□□□□□□□□□□□□□

□□□□□

- □□□□□□□□□□□□□□□□
- □□
- □□□□□□□□□□□□□□□□□□□□□□□□□□□□□□□□□□□□□□□

□□□□

□□□□

□□□□“□□□□□□□□□□□□□□□□□□□□□□”□□□

□□□□□□

□□

□□□□

□□□□□□□□□□□□□

□□□□□□□□□□□

□□□□□□□□

Part No	Part Name	parts specification	quantity (pc)
1	Flange	℄300*t6	2
2	reinforcing plate	100*70*t5	4
3	connecting plate	20*80*t5	16
4	mainboard	250*1800*t3	2
5	stand column	℄60*t3	4
6	Liang support circular tube	℄100*t3	2
7	Liang square tube in the middle	℄40*t2.5	2
8	Liang lateral bracing tube	℄50*t2.5	2
9	connecting plate	100*200*t5	2
			4
PV-5C bike rack mate	Size :W140*D30*H26CM Squaretube:30*30*2mm , Round Rube:16*1.5mm . Net weight:7.1Kg	Size :W140*D30*H26CM Squaretube:30*30*2mm , Round Rube:16*1.5mm . Net weight:7.1Kg	
surface treatment	hot galvanized and powder coating		

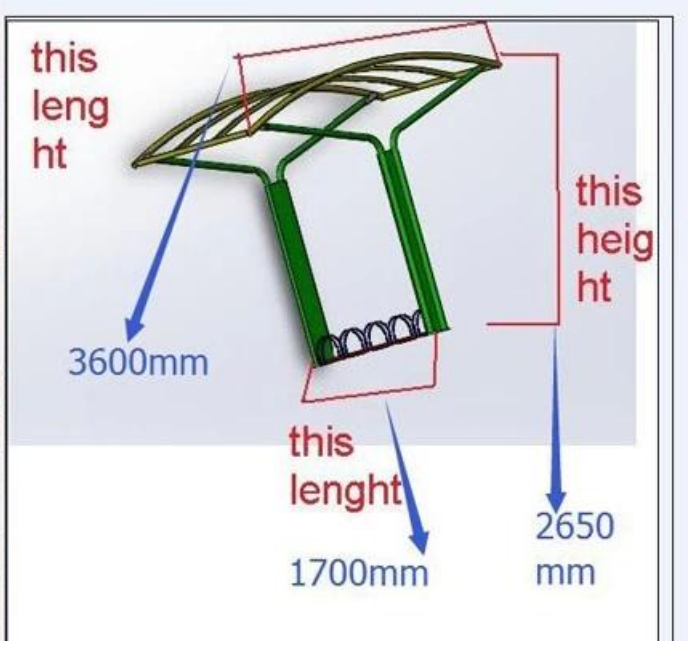

Pcacking